Argonne National Laboratory

9700 Cass Avenue

Argonne, Illinois 60439

DOCUMENT NO. L143-00032

SLAC NO. SP-381-001-02

STATEMENT OF WORK

FOR

LCLS UNDULATOR MAGNETS

WBS L1.04.03

Prepared by	Glen S. Lawrence Originator	Date	03 March 05
Approved by	Patric Den Hartog XFE Group Leader	Date	04 March 05
Approved by	Elizabeth Moog MD Group Leader	Date	04 March 05
Approved by	Thomas Barsz QC Coordinator	Date	08 March 05
Approved by	Marion White LCLS Undulator CA Manager	Date	08 March 05
Approved by	Stephen Milton LCLS Project Manager	Date	08 March 05

ARGONNE NATIONAL LABORATORY	***Document No.** **L143-00032-01**	
NOTIFICATION OF SPECIFICATIONS REVISION	____	____ ____
Title: Statement Of Work for LCLS Undulator Magnets	**Page ii of iv**	

***The document number as it appears on this page only shall be used to identify this document. The last two digits denote the revision number of this document (see Revision Authorization block below).**

This document is fully representative of the Document No. only when the revision number on its pages correspond with those in the index below.

INDEX OF PAGE REVISIONS

(INDEX)

PAGE NO.	01	02	03	04	05	06	07	08	09	10	11	12	13	14	15
REV. NO.	00	00	00	00	00	00	00	00	00	00	00	00	00	00	00

PAGE NO.	16	17	18	19	20	01	02	03	04	05	06	07	08	09	10
REV. NO.	00	00	00	00	00	01	01	01	01	01	01	01	01	01	01

PAGE NO.	11	12	13	14	15	16	17	18	19	20					
REV. NO.	01	01	01	01	01	01	01	01	01	01					

PAGE NO.															
REV. NO.															

PAGE NO.															
REV. NO.															

PAGE NO.															
REV. NO.															

REVISION AUTHORIZATION

REVISION NUMBER	00	01	02	03	04	05	06	07	08
DCN NUMBER	040908-03	050425-07							
DATE	3-3-05	4-25-05							
APPROVED BY	GSL	GSL							

TABLE OF CONTENTS

		Page
	INDEX OF PAGE REVISIONS	ii
	TABLE OF CONTENTS	iii
1.0	INTRODUCTION:	1
2.0	SCOPE:	1
2.1	Scope of Work for the LCLS Undulator Magnets.	1
2.2	Delivery.	2
3.0	APPLICABLE DOCUMENTS AND /OR SPECIFICATIONS:	2
4.0	TECHNICAL TASKS AND QUALITY ASSURANCE:	3
4.1	Fabrication.	3
4.1.1	Materials.	3
4.1.2	Magnet Specifications.	4
4.1.2.1	Geometry.	4
4.1.2.2	Magnetic Properties.	4
4.1.2.3	Stabilization.	6
4.1.3	Surface Finish.	6
4.1.4	Marking.	7
4.1.5	Sorting Procedure.	7
4.1.6	Slot Assignment.	8
4.1.6.1	Pairing.	9
4.1.6.2	Spares.	10
4.1.6.3	Assigning Slots.	10
4.1.6.4	Assigning Jaw Position.	10
4.1.6.5	Main Field Orientation.	12
4.1.6.6	X-Axis Field Orientation.	12
4.1.7	Reduced Magnetization of End Magnets.	12
4.1.8	Packaging.	12
4.2	Program Meetings.	13
4.3	Test Procedures.	13
4.3.1	Physical Measurements.	13
4.3.2	Magnetic Measurement.	14
4.3.3	Metrology Requirements.	14

4.3.4 Verification Testing. 15
4.4 Special Tooling. 15
4.5 Quality Control. 15
4.6 Quality Assurance. 15
4.7 Red Flag Notice. 16
4.7.1 Date and Number. 16
4.7.2 Contract Required Delivery Date. 16
4.7.3 Estimated Shipping Dates. 16
4.7.4 Statement of Problem. 16
4.7.5 Consequence. 16
4.7.6 Action Taken. 17
4.7.7 Action Required. 17
4.7.8 Assistance Required. 17
4.7.9 Number of Times Reported. 17
4.7.10 Acknowledgement of Responsibility. 17
4.8 Nonconformance Reporting. 17
4.9 Approvals. 18
5.0 REPORTS, DATA, AND DELIVERABLES: 18
5.1 Progress Report. 18
5.2 Technical Data. 18
5.3 Delivery. 19
6.0 OTHER SPECIAL CONSIDERATIONS: 20
6.1 Subcontractors. 20

1.0 INTRODUCTION:

The Linac Coherent Light Source (LCLS) will be the world's first x-ray free electron laser when it becomes operational in 2009. The LCLS is a US-DOE-funded project that is currently in the detailed project engineering and design phase. Design and construction are accomplished by a partnership of three US national laboratories including the Stanford Linear Accelerator Center (SLAC) as home laboratory, together with the Lawrence Livermore National Laboratory (LLNL) and Argonne National Laboratory (ANL). The start of construction is planned in FY2005. Pulses of x-ray laser light from the LCLS will be many orders of magnitude brighter and several orders of magnitude shorter than presently-available x-rays from other sources. These characteristics will enable frontier new science in areas that include discovering and probing new states of matter, understanding and following chemical reactions and biological processes in real time, imaging chemical and structural properties of materials on the nanoscale, and imaging non-crystalline biological materials at atomic resolution.

In a Free Electron Laser, the actual lasing occurs as a result of the electron beam passing through a precision magnetic device called an undulator. Undulator construction is the responsibility of ANL.

2.0 SCOPE:

2.1 Scope of Work for the LCLS Undulator Magnets.

Forty (40) undulators are required for the LCLS project. The present procurement is for all the undulators' Undulator Magnets for a total of 19,200 Magnets. An experimental prototype undulator was constructed and tested at the Advanced Photon Source (APS) at ANL. Some magnet material refinements have been made since it was built, and are incorporated into the production magnet design.

Each undulator includes a precision-tuned array of very strong permanent magnets and magnetic poles that result in a precisely-set magnetic field down the axis along which the electron beam eventually travels. There are extremely stringent requirements on the magnetic field uniformity and quality in the final device. Careful attention must be paid at each step in the construction to ensure that the final-assembled, magnetically-tuned undulator meets all requirements. Similar devices have been constructed and tuned for

the Advanced Photon Source and other light-source facilities; however, some of the precision and stability requirements for the LCLS devices far exceed those for existing undulators.

If these requirements are not met, or if the devices are not stable enough over time, then the desired interaction between the radiation produced in the undulator and the electron beam will not take place, and the free electron laser will not function.

The undulator magnets will be assembled into an array consisting of high-saturation alloy poles alternately sandwiched between the magnets. The magnet orientation of each successive magnet will be rotated 180 degrees in order to achieve a spatially oscillating magnetic field along the undulator axis. The magnets shall be made out of neodymium iron boron, and machined to final size per ANL drawing L143-110106, "Undulator Unit Assembly, Magnet Structure, Magnet."

2.2 Delivery.

The LCLS undulator magnets described in this Statement of Work shall be delivered in forty lots, and each lot shall consist of 480 magnet blocks. They shall be delivered no later than the times indicated on the following schedule, which are in weeks after award of contract:

Lot	Total Quantity	Weeks After Award
1 and 2	960	16
3 thru 40	18240	25

Each shipment shall be identified in such a way that it can be correlated to the proper purchase order, ANL drawing number, and descriptive title. Each magnet shall be marked with a unique serial number and that serial number shall be used on all records of test and measurement data and certifications relating to that undulator magnet.

3.0 APPLICABLE DOCUMENTS AND /OR SPECIFICATIONS:

The contractor effort shall be in conformance with the Undulator Magnet drawing L143-110106,"Undulator Unit Assembly, Magnet Structure, Magnet."

4.0 TECHNICAL TASKS AND QUALITY ASSURANCE:

The principal criteria important to this procurement are the uniformity among the magnets in total magnetic dipole moment, the maximum angle of inclination between any undulator magnet's magnetic and geometric axes, and the stability of the magnetic moment in a demagnetizing field. Test procedures will be employed to measure mechanical and magnetic properties of the individual magnets. These measurements will be used for acceptance testing.

The undulator magnets will encounter demagnetization fields sufficient to drive each magnet into the third quadrant. This tendency to demagnetize can be largest in the assembly process, which involves insertion of each magnet between its contiguous poles while approaching from the side of the array. In order to assure achieving the required precision and uniformity in the undulator array, all the magnets must be demagnetization stabilized by the supplier to a minimum of 1.35 H_{cB}.

The undulator magnets are likely to be subjected to a modestly rigorous operating environment. This requires that each magnet be thermally stabilized by the supplier to 60°C. These stabilizations signify that the magnets will not suffer any irreversible remanent magnetic field loss if they are subsequently exposed to either a temperature or demagnetizing field less than or equal to either of these values (60°C and 1.35 H_{cB}).

4.1 Fabrication.

The contractor shall furnish all materials, personnel, facilities, tools, equipment, and services to fabricate, test, document and deliver the undulator magnets, part no. L143-110106 listed in Section 2.1 of this Statement of Work.

4.1.1 Materials.

Each magnet shall be a single piece, individually die-pressed and sintered, out of neodymium iron boron. The undulators will have an electron beam traveling in a vacuum tube along the undulator axis. As a result, the magnets will be exposed to radiation. Since the resistance of NdFeB magnets to radiation-induced demagnetization is greater for higher-coercivity magnets, a high-coercivity grade of NdFeB magnet is preferred. The grade of neodymium iron boron used must have a minimum value for B_r of 1.22

Tesla and a minimum coercivity H_{CJ} of 25,000 Oersted. Grades such as Shin-Etsu N39UH or Neomax 38VH meet these requirements. Bidders may propose more than one grade of material, but must explain the cost/performance trade-offs.

4.1.2 Magnet Specifications.

4.1.2.1 Geometry.

The undulator magnet geometry, dimensions, and tolerances are defined on drawing L143-110106, "Undulator Unit Assembly, Magnet Structure, Magnet". In no event must any imperfection compromise structural or magnetic integrity of the piece. Note that, except for the serial number and the north vector indicator, the magnet is symmetric in four orientations. The magnet may be used in any of those orientations, and failure to pass inspection in any of those orientations is cause for rejection.

4.1.2.2 Magnetic Properties.

The magnetic properties of concern are the total dipole moment and the angle of inclination of the polarization vector from the geometric axis.

4.1.2.2.1 Polarization Vector. The polarization vector shall be parallel to the thickness dimension shown in Figure 1. The angle between the polarization vector and the mechanical axis of the magnet shall be less than 2°.

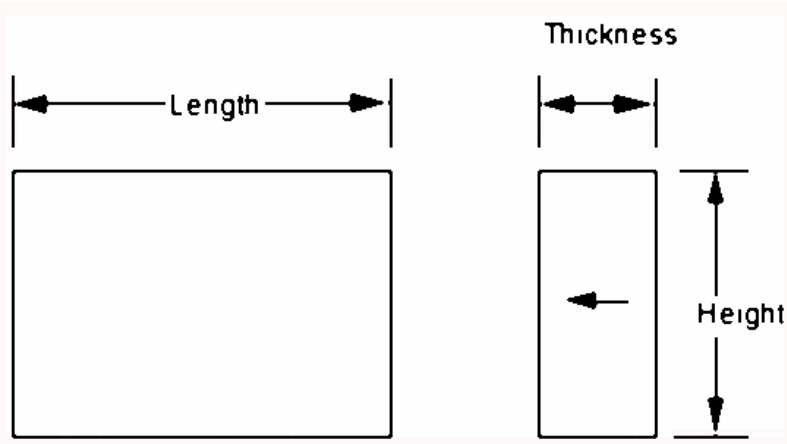

Figure 1
Schematic geometry of the Magnet block with dimensions of interest identified. For exact geometry, physical tolerances and other aspects of the Magnet block, refer to the official drawing.

4.1.2.2.2 Magnetic Moment. Criteria for minimum average total dipole moments are based on a minimum bulk remanent flux density B_r of 1.22 Tesla. The corresponding minimum value for the normalized coercive force H_{cB} shall be 11,400 Oersted. The intrinsic coercive force must be sufficient to allow proper stabilization of the magnets, and higher intrinsic coercive force magnets are desired for their increased radiation resistance. It should be stressed that these are the minimum acceptance values, and that mean values exceeding these levels are acceptable and desirable. These remanent field specifications apply after magnetic and thermal stabilization. The maximum variance in total dipole moment of the magnets shall be less than ±1.5%. Variance shall mean the difference between the total dipole moment of any individual magnet and the total dipole moment averaged over the entire order.

If the principal magnetic moment is labeled M_z as shown in Figure 2, the error components of the magnetization vector are M_x and M_y. Local surface variations in these components are of concern to the Laboratory because of the non-uniformities they produce in the magnetic field of the assembled magnet/pole array. Those surfaces in the attached drawing identified with the marking "no chips on this area" are considered critical surfaces. The minimizing of local inhomogeneities in M_x and M_y along those magnet surfaces is highly desirable.

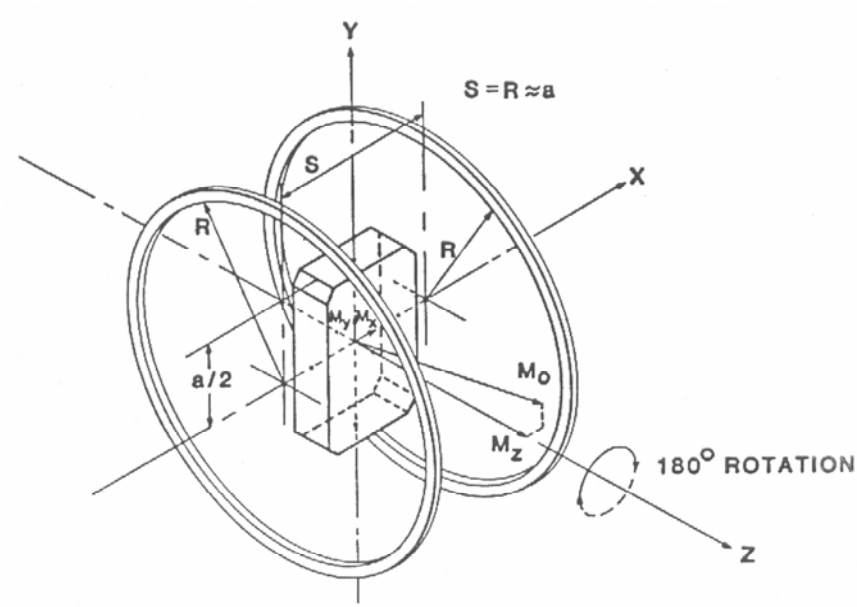

Figure 2
Magnetic dipole measurement technique.

4.1.2.3 Stabilization.

Every undulator magnet shall undergo both thermal and demagnetizing stabilization by the supplier prior to testing for total dipole moment and polarization vector orientation. Thermal stabilization to at least 60°C is required. Demagnetization stabilization shall extend into the third quadrant to a level of at least 1.35 H_{cB} (normalized coercive force). This is understood to mean that any magnet subjected to a demagnetizing field equivalent to 1.35 H_{cB} will not suffer any irreversible loss of magnetization. After both stabilizations, when M(H) is fitted against a straight line in the region $-1.3H_{cb} \leq H \leq 0$, the deviation of M shall remain within 2.5% from the fitted straight line. Stabilization methods should ensure against measurable irreversible loss of magnetization by exposure to either condition. The Contractor shall certify that the magnets have been appropriately stabilized for thermal and demagnetization effects.

4.1.3 Surface Finish.

NdFeB magnets have a tendency to corrode, and their magnetic properties degrade as a result of this corrosion. The Laboratory requires that the pieces have a surface treatment to inhibit corrosion. The corrosion treatment shall be nickel plating or other metallic plating, with a plating thickness that is not less than 0.01 mm (0.0004 inches) and not more than 0.05 mm (0.002 inches). Mechanical tolerances are also an issue associated with the surface treatment. Please note that mechanical dimensions and tolerances include any surface treatment.

The area of visibly detectable pits in the undulator magnets shall not exceed 5% of the area of any surface. Pits are defined to be craters where dimensions are no more than 3 mm x 3 mm x 0.5 mm deep; pits less than 0.5 mm x 0.5 mm may be considered to be not visibly detectable. The permitted area of pits on some surfaces is smaller than this and is noted in the attached mechanical drawing. Any hairline cracks shall be less than 10 mm long and less than 0.5 mm deep. In no case shall hairline cracks compromise the mechanical strength of the magnet.

The Contractor shall certify that the surface coating and the surface requirements for pits and cracks meet the requirements of this Statement of Work.

4.1.4 Marking.

Every undulator magnet shall be marked for identification with a unique 5-digit serial number permanently affixed as indicated on the mechanical drawing. The magnetic north vector shall also be indicated as shown on the drawing. The "top" of the magnet shall have the serial number to the right of the magnetic north vector as shown and the opposite side, or "bottom," shall have the serial number to the left of the north magnetic vector. Numbering need not be consecutive, but must be unique. Alphabetic characters are not acceptable. The marking shall not be removable with water. The marking shall not protrude above the face of the magnet more than 0.003 mm (0.0001 in). The marking shall leave the integrity of the anti-corrosive plating intact.

Each undulator magnet shall be separately packaged and the container labeled for identification. The following identifying marks are to be written or typed on the package label in three lines.

a) The first line shall be the ANL Part Number-Revision Number (ANL Part No. L143-110106-02).
b) The second line shall be the SLAC Part Number (PF-381-000-33).
c) The third line shall be the unique serial number for the particular magnet (Serial No. 00001).

The information in parenthesis provides examples of the information to be typed on the magnet label. The actual revision and serial numbers shall be whatever is applicable to the part being packaged and tagged.

4.1.5 Sorting Procedure.

The total order of magnets is to be shipped in 40 lots as stated in Section 2.2. Each lot contains the magnets for one undulator. The lots are to be consecutively numbered from one (1) to forty (40). The magnets included in each lot are not to be randomly selected, but, instead, are to be selected by the Contractor according to the following Sorting Procedure.

4.1.5.1 Start from the total population of magnet blocks available. This may be all of them, or it may be a subset of the total number, if the magnet blocks for all the undulators are produced in batches. Sort all magnet blocks by the strength of the total magnetic moment, from weakest to strongest.

4.1.5.2 To select the 480 magnets in the first lot, take the weakest 240 magnet blocks and the strongest 240 blocks from the total available population. The 480 magnets designated in each lot include 30 more magnet blocks than will be in the finished undulator. This will allow some choice in assigning magnets to specific slots in the undulator and will allow for breakage of an occasional magnet block and for spares that are close in strength to the magnets that will be installed. It will also allow for a few magnets to be sent directly to ANL for quality assurance testing.

4.1.5.3 To select the 480 magnets for the second (or subsequent) lot, take the weakest 240 and the strongest 240 from the remaining population of magnets. Repeat for the remaining magnets in the population until all the magnets have been sorted into lots.

4.1.5.4 The magnets for a single undulator, or lot, shall be packaged together. External labels on the shipping boxes shall indicate the serial numbers of the magnets enclosed in the box and the lot number in which they are to be used.

4.1.5.5 As soon as the magnet serial numbers in a given lot are known, the lot number and serial numbers of the magnets are to be e-mailed as an Excel file to ANL. The list shall include all measured values of the magnets as defined in Section 4.3. The Laboratory will identify those magnets in the lot to be inspected at ANL. The remainder of the magnets shall be assigned to specific undulator slots by the Contractor as defined in Section 4.1.6.

4.1.6 Slot Assignment.

Magnets shall be selected in pairs; each pair will contain one weak magnet and one strong magnet. The pair shall be assigned to an undulator slot, one to the upper jaw and one to the lower jaw. There are 450 magnets in an LCLS undulator, or 225 pairs of magnets for the 225 positions in the lower jaw and 225 positions in the upper jaw. The Contractor shall prepare a slot assignment list that assigns each magnet, by its serial number, to a specific slot in the upper or lower jaw of the undulator, states the orientation of the magnet in the slot, whether the North magnet pole is to the left or right (downstream or upstream), and whether the “top” or “bottom” of the magnet (see Section 4.1.4) is facing the undulator gap. The list shall be prepared in a clear format with the

data laid out conveniently for use by the Undulator Assembly Contractor during assembly of the undulator magnet structures.

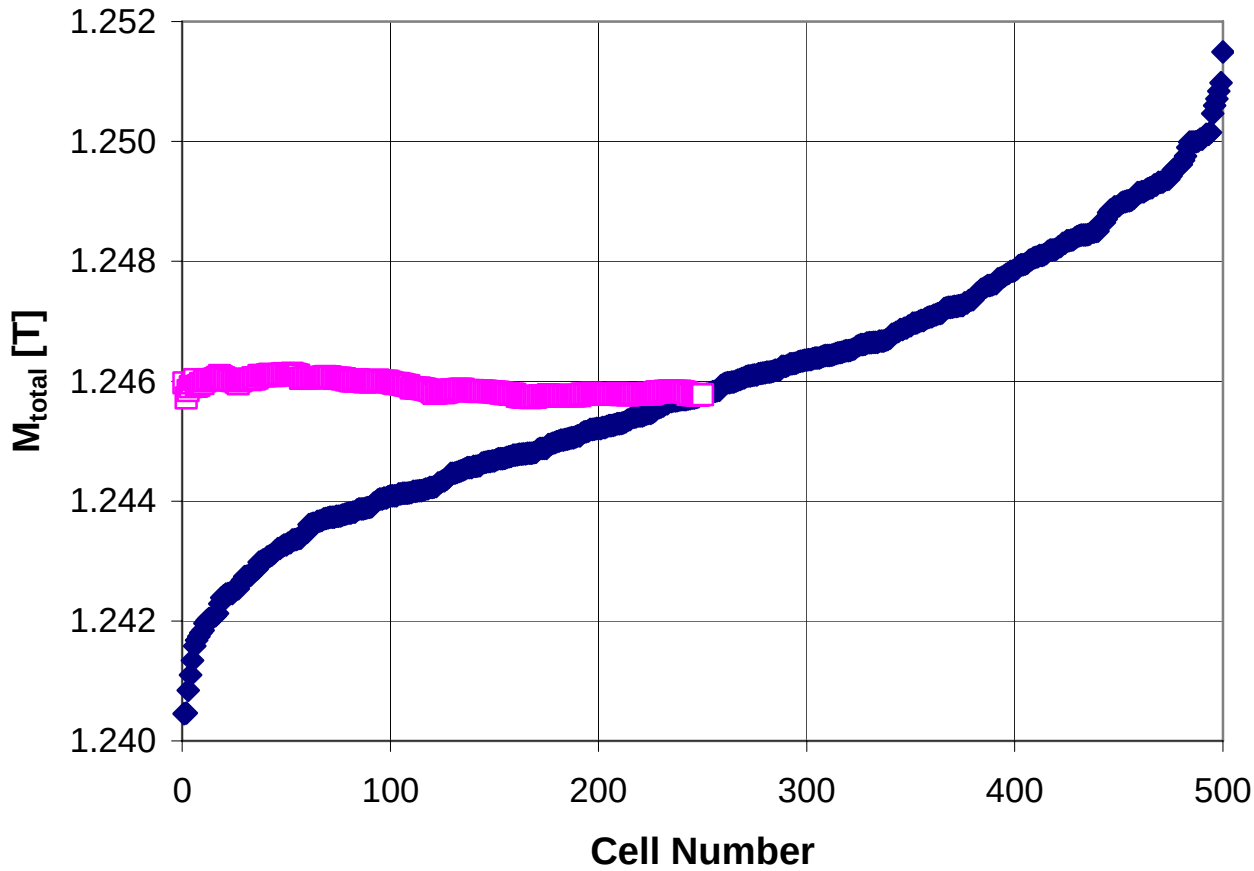

Figure 3 Example of sorting in ascending order and the paired results.

4.1.6.1 Pairing.

A lot of magnets shall be sorted in ascending (descending) order according to the total moment, M_T. As an example, if the distribution of magnetic moment is close to Gaussian for a lot of 500 magnets, the sorted result is similar to that in Figure 3 (solid diamonds). In this figure, open squares show the paired results (average of paired magnets). Pairing is done by matching the magnet of smallest magnetization (in cell #1) with the magnet of largest magnetization (in cell #500) to make pair 1, magnet in cell #2 is paired with magnet in cell #499 to make pair 2, and so on.

The set of magnets to be paired and assigned for the LCLS undulator will be a lot of 480 magnets less those chosen by the laboratory to be inspected and tested. Pairing will result in more pairs than the 225 pairs required for the undulator assembly. Excess pairs shall be set aside as spares prior to assigning pairs to undulator slots.

4.1.6.2 Spares.

Select the pairs to be set aside as spares by selecting pairs in uniform increments (in the case of 14 spare pair to be selected out of 239 pairs, this would be every seventeenth pair) starting at pair 5 until only 225 pairs remain.

4.1.6.3 Assigning Slots.

Each LCLS undulator requires 225 pairs of magnets in slots between pole pieces in the top and bottom jaws of the undulator. When a pair of magnets is assigned to a specific slot, one of the pair will get assigned to the bottom jaw and the other to the corresponding slot in the top jaw as specified in Section 4.1.6.4. The undulator slots shall be numbered for identification 1 through 225 from the downstream end to the upstream end of the undulator. The paired magnets described in Section 4.1.6.1 shall be assigned specific undulator slots in the following manner.

The pair of magnets with the maximum deviation of magnetization from median value shall be assigned the undulator slot #1. The pair of magnets with the second most deviation shall be assigned to slot #225. The pair of magnets with the third most deviation shall be assigned slot #2 and so on until the pair of magnets with the minimum deviation of magnetization from median value is assigned to the undulator's central slot #113.

4.1.6.4 Assigning Jaw Position.

The next step is to assign each magnet in a pair to the top jaw or the bottom jaw of the undulator. In every even numbered slot (2, 4, 6, ~, 222, 224), the magnet which has the smaller magnetization value of the pair should be placed in the bottom jaw and the other magnet in the corresponding slot in the top jaw. In every odd numbered slot (1, 3, 5, ~, 223 225), the magnet which has the larger magnetization value of the pair should be

placed in the bottom jaw and the other magnet in the corresponding slot in the top jaw. The described assignment results in an arrangement of magnets alternating weaker (W) magnets with stronger (S) magnets as shown in Figure 4.

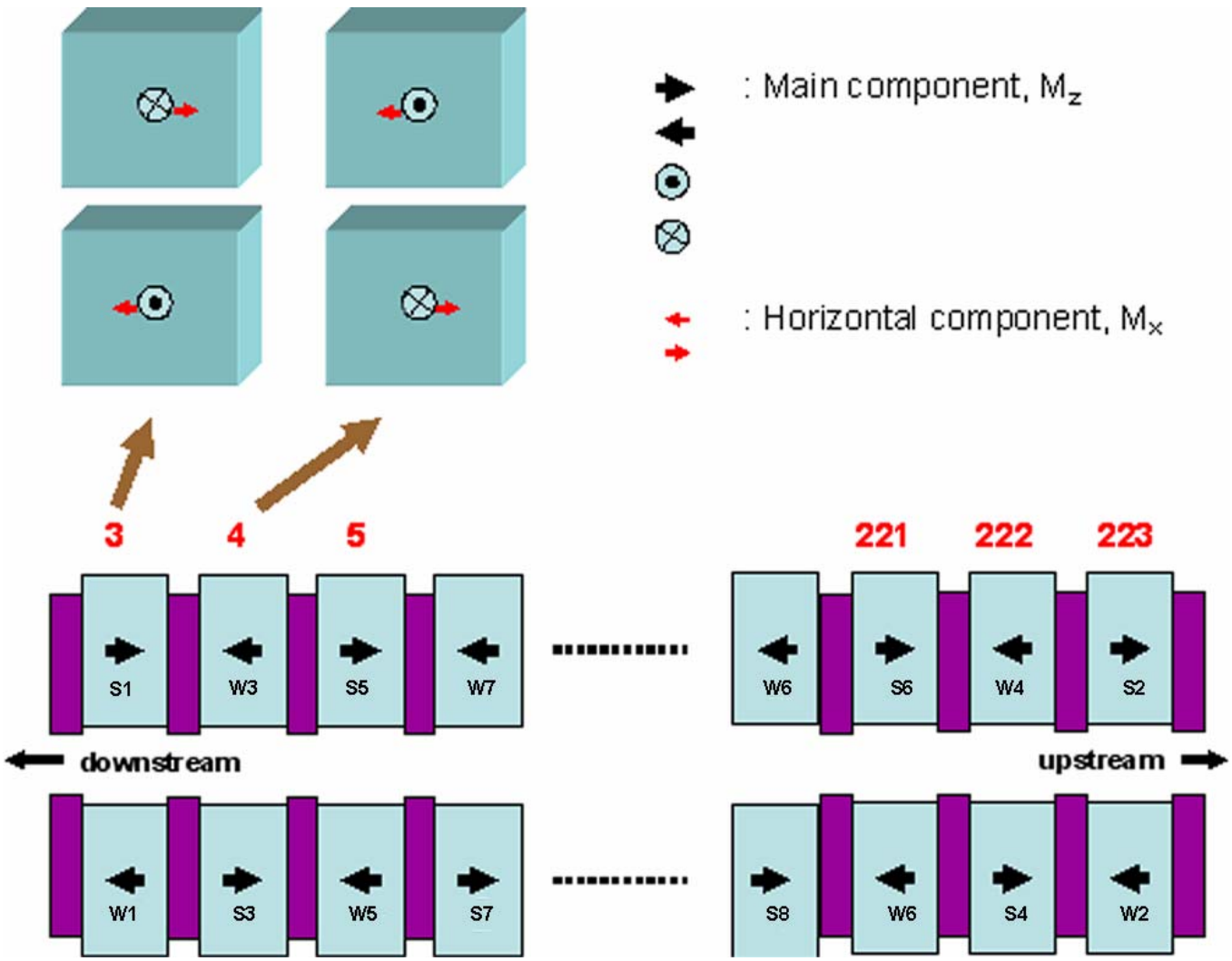

Figure 4 Schematic Drawings of Magnet Arrangements

4.1.6.5 Main Field Orientation.

The direction of magnetization, M_T, of the magnet in slot #1 of the bottom jaw should be directed toward the upstream end, and the direction of M_T in the corresponding slot of the top jaw should be toward the downstream end. All odd numbered slots are arranged the same as slot #1. The magnets in the second slot should have the opposite magnetization orientation, i.e. M_T of the magnet in slot #2 in the bottom jaw should be directed toward the downstream end and M_T in the corresponding slot of the top jaw should be toward the upstream end. All even numbered slots are arranged the same as slot #2. Note that, in Figure 4, the magnetization vector on adjacent and opposite slots are opposing.

4.1.6.6 X-Axis Field Orientation.

The final component in determining the position of the magnet in the undulator slot is the X axis component of the magnetization, M_x. The magnets are to be positioned so that M_x in adjacent slots and opposite slots are opposing as shown in Figure 4. The direction of Mx is set by whether the "top" or "bottom" of the magnet faces the undulator gap.

4.1.7 Reduced Magnetization of End Magnets.

The magnets in undulator slots 1 and 225 shall be reduced in magnetization to 33% ±1% of the mean M_T value. The magnets in undulator slots 2 and 224 shall be reduced in magnetization to 80% ±1% of the mean M_T value. The spare pair 5 (see section 4.1.6.2) shall have one magnet reduced to 33% and one reduced to 80% of the mean M_T value for the magnet lot. These reduced values may be achieved by either heat treatment or demagnetization. Note that the position of the magnets in the undulator upper or lower jaw and the orientation of the magnets in the slot as defined in Sections 4.1.6.4 through 4.1.6.6 must be based on the final reduced magnetic field.

4.1.8 Packaging.

The undulator magnets shall be appropriately packaged to protect them from shipping damage. No nicks, chips or scratches in excess of those allowed in Section 4.1.3 are acceptable.

4.2 Program Meetings.

Program meetings of the Contractor with Laboratory representatives for purposes of reviewing and resolving progress, fabrication, testing, and managerial issues may be held at the discretion of either the Laboratory or the contractor. Current information on all aspects of the program shall be made available by the contractor to the Laboratory one week in advance. The meetings shall be held via teleconference or videoconference, unless the Laboratory chooses otherwise. A mandatory notice and meeting agenda will be provided by the Laboratory one week before a program meeting can be held. The contractor shall have the responsibility to provide minutes of the meeting within two (2) weeks following the session.

4.3 Test Procedures.

The contractor shall conduct testing of the undulator magnets prior to delivery and acceptance by the Laboratory. Acceptance tests shall be in accordance with Sections 4.3.1 through 4.3.3 of this Statement of Work. Certified test results shall be submitted by the contractor to the Laboratory before or at delivery of the Magnets. Paper copies of the reports shall contain the signature and title of the authorized contract representative of the agency performing the tests and shall be subject to review and acceptance by Supplier Quality Control.

4.3.1 Physical Measurements.

The magnets shall each be measured or otherwise tested by the contractor to verify all dimensions and other drawing requirements. While some dimensions may be reported as in conformance with the drawing, critical features as listed below shall be certified that the actual measured values arein compliance with the drawing required value or tolerance. The following items are critical features:

1) Height of the magnet (57.00 ±0.05).
2) Surface finish of the two sides of the magnet, (3.2).
3) Thickness of the magnet (9.00 +0.00 -0.10).

Any non-conforming dimension or feature must be reported with the measured value and the required value or tolerance.

4.3.2 Magnetic Measurement.

The demagnetization curve for each material batch shall be measured and plotted, and the serial numbers of the magnets made from that material batch shall be noted. Every magnet shall be measured by the contractor to determine M_x, M_y, and M_z as shown in Figure 5 and the total dipole moment. The signs of M_x, M_y, and M_z shall be consistent with vector direction shown in Figure 5. The "top" of the block has the serial number to the right of the marked magnetization vector and the "bottom" has the serial number to the left of the marked magnetization vector. The test results shall be recorded and reported by serial number of the magnet with the actual measured values and with the required values as indicated in Section 4.1.2.

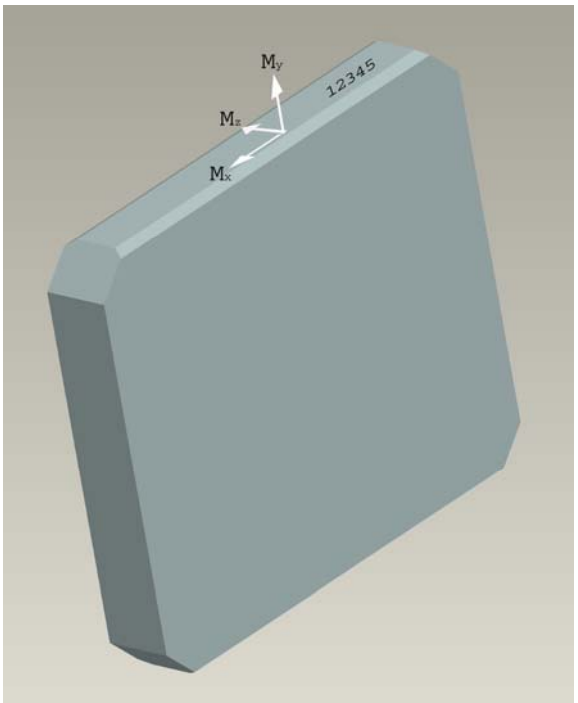

Figure 5

Magnet Block with Magnetic Moment Vectors shown

4.3.3 Metrology Requirements.

All dimensions and values apply at a temperature of 20°C. The part must be in thermal equilibrium during measurements and at the same temperature at the beginning and conclusion of the measurements within 2°C. The part temperature, before and after dimensional measurement, shall be recorded and reported. Repeatability and resolution of the testing equipment, including the effects of drift and temperature dependence, shall be sufficient to assure that the required tolerances are met.

4.3.4 Verification Testing.

The Laboratory will select random magnets from each lot to be shipped to ANL for testing. The magnets will be tested for size, total dipole moment, and magnetic orientation. The tests will include examination with magnetic visualization film, mechanical measurement, and measurement of the magnetic field using a precision Helmholtz coil pair. These tests will determine the acceptance by the Laboratory of the magnet lot. Pieces that have magnetic anomalies, or that do not meet the magnetic or mechanical specifications, or that have imperfections that compromise the structural or magnetic integrity of the piece shall be rejected and may be cause for rejecting the lot. Additionally, some number of magnets, randomly selected from the total order, will have their demagnetization and thermal stability verified.

4.4 Special Tooling.

The contractor shall design and fabricate any special tooling required for fabrication of the Magnets. All special tooling fabricated by the contractor is the property of the Laboratory and shall be accounted for by the contractor. Disposition of the special tooling at the conclusion of contract shall be at the option of the Laboratory in accord with FAR clause 52.245-17.

4.5 Quality Control.

Prior to effecting any change in an ANL approved design or process for use in this procurement, the supplier shall obtain the Laboratory's written approval. Such changes must be documented by the contractor as "marked drawing" changes to the engineering drawings for the affected item prior to the Laboratory's approval. If approved, revised drawings shall be issued by the Laboratory.

4.6 Quality Assurance.

The contractor shall prepare and maintain a Quality Verification Program for control of quality of articles furnished in accordance with this contract. A plan shall be prepared and submitted to the Laboratory Procurement Official for written approval by ANL-LCLS Quality Assurance prior to its required use by the contractor. The contractor's

quality assurance manual may suffice providing it adequately implements the quality requirements specified.

4.7 Red Flag Notice.

The contractor shall immediately notify the Laboratory of any occurrence which will impact contract schedule. The notification shall be either written or oral with written confirmation within 48 hours on a Red Flag Report, and shall include remedial action taken to offset the problem. The contractor shall provide his own format compatible with the following requirements:

4.7.1 Date and Number.

Each Red Flag Notice is to be dated and consecutively numbered.

4.7.2 Contract Required Delivery Date.

Contract delivery date for the subject of the report. It does not normally change from one report to the next.

4.7.3 Estimated Shipping Dates.

Include the prior Report estimate and this Report estimate.

4.7.4 Statement of Problem.

All problems shall be presented as separate items in clear concise text describing the reason why the end item is late, the reason for any slippage since the last report and the current status of the work.

4.7.5 Consequence.

The consequence of the problem or delay shall be concisely stated in terms of impact on delivery, the meeting of key milestones, the progress of other work, or on meeting specification requirements, etc.

4.7.6 Action Taken.

The action being taken to resolve the problem and recover schedule delays shall be described and the estimated effect of this action shall be highlighted. The name of the key individual in the contractor's organization who must act to resolve the problem shall be shown.

4.7.7 Action Required.

Future action to recover schedule shall be identified. The action shall be described, the action party identified by name, title and organization, and the date when completion of the action is required shall be set forth.

4.7.8 Assistance Required.

Any assistance required from the Laboratory to further the progress of the recovery program shall be set forth. The exact nature of any required assistance shall be stated and the date by which such action must be taken shall be provided.

4.7.9 Number of Times Reported.

The number of previous critical items reports which have identified the same problem as critical to the progress of the work or to satisfaction of the technical requirements shall be set forth.

4.7.10 Acknowledgement of Responsibility.

Each report shall acknowledge that the reporting of the critical items therein does not relieve the writer of responsibility for seeing that the necessary corrective action is taken on each item.

4.8 Nonconformance Reporting.

The contractor shall report any non-conformances to specifications, drawings, or other contract requirements on ANL Form 311 (copy is attached).

4.9 Approvals.

All Laboratory approvals required by this contract shall be acted upon within two (2) weeks of receipt by ANL of submission by the contractor. Action will consist of a notice of approval, clarification request or rejection in writing from the Laboratory Subcontract Administrator. Approvals shall not relieve the contractor of any responsibility for reliability, quality, delivery, cost, performance or other requirements of this contract.

5.0 REPORTS, DATA, AND DELIVERABLES:

5.1 Progress Report.

The contractor shall submit monthly progress reports during the execution of this program. The progress report shall include narrative and tabular summary of performance during the report period. It shall include work performed, work forecast, and problem description and resolution. The contractor shall emphasize any deviations from plan or schedule, the reasons and impacts of such deviations, and the effects of management efforts undertaken for corrective or expeditious actions.

5.2 Technical Data.

The contractor shall deliver all technical data as specified below. The delivery of electronic copies shall be done by e-mail to the Laboratory Procurement Official and the Contract Technical Representative.

5.2.1 For the Quality Verification Plan (Section 4.6), an electronic copy in PDF format followed by two (2) paper copies are required once 30 days after award of contract. Any changes to these documents must also be submitted.

5.2.2 For Progress Reports (Section 5.1), an electronic copy in PDF format followed by two (2) paper copies are required monthly, 10 days after the end of each month. The first report shall be due 40 days after award of contract.

5.2.3 For certifications (Sections 4.1.2.3, 4.1.3 and 4.3.1), an electronic copy in PDF format followed by two (2) paper copies are required for ANL and an

additional electronic copy and set of paper copies for the Undulator Assembly Contractor is required with the shipment of a given lot of Magnets.

5.2.4 For test results and measured values for each lot of magnets, an electronic copy in Excel spreadsheet or compatible format followed by two (2) paper copies are required for ANL.

5.2.5 For slot assignments, an electronic copy in Excel spreadsheet or compatible format followed by two (2) paper copies are required for ANL, and one (1) set each of electronic and paper copies for the Undulator Assembly Contractor is required with the shipment of a given lot of Magnets.

5.2.6 Each of the following items shall be submitted on an "as required" basis. When (or if) they are required, submit an electronic copy in PDF format followed by two (2) paper copies.

a) Red Flag Notice (Section 4.7), submit within 48 hours of an occurrence.
b) Nonconformance Report (Section 4.8), ANL approval required for disposition of a non-conformance.
c) Program Meeting Minutes (Section 4.2), submit within 2 weeks of a Program Meeting.

5.3 Delivery.

The contractor shall deliver the Magnets listed in Section 2.1 of this Statement of Work per the schedule indicated in Section 2.2 of this Statement of Work. The undulator magnets shall be shipped to the docks of the designated Undulator Assembly Contractor with the exception of magnet blocks selected for quality assurance testing at ANL. It is likely that two assembly Contractors will be selected. The delivery of the lots shall be divided between the two Contractors according to instructions from the Laboratory. The Laboratory shall select a few blocks by serial number from each lot, and these magnet blocks shall be shipped to ANL (see Section 4.1.6). If the undulator assembly contracts are not in place at the scheduled delivery time for a lot of magnets, the contractor shall store the finished magnets until Argonne National Laboratory confirms the shipping destination. A monthly storage rate by lot shall be included in the bid for this task that would be effective only if storage is required for a lot after the contracted shipment date.

6.0 OTHER SPECIAL CONSIDERATIONS:

6.1 Subcontractors.

Should the contractor intend to subcontract any portion of this work, such intentions, possible subcontractors, and the scope of their involvement shall be included in the proposal. ANL is to be informed of any change in subcontractors prior to any such change taking effect. ANL reserves the right to reject the use of any particular sub-contractor.