REVISIONS					
ZONE	REV	DESCRIPTION	BY	APPROVED	DATE

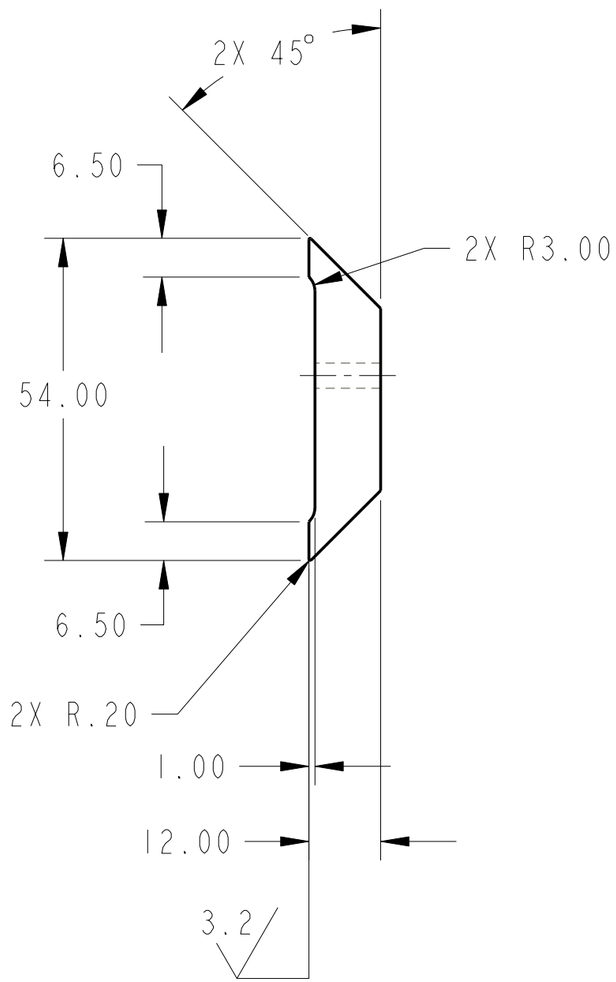

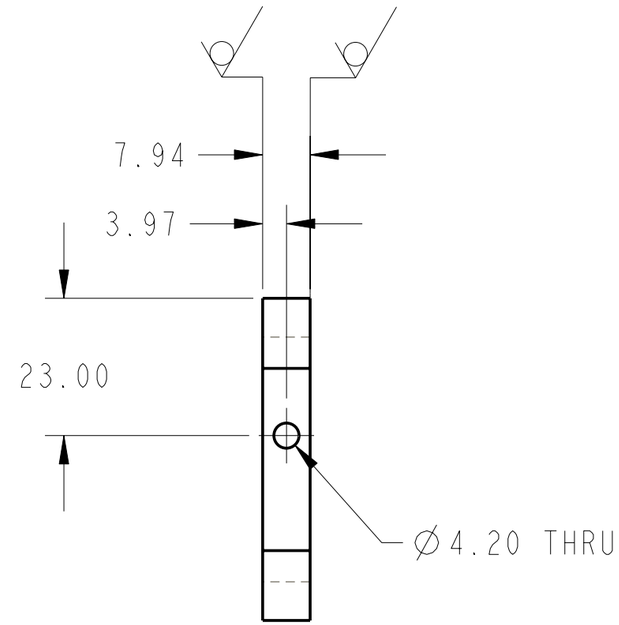

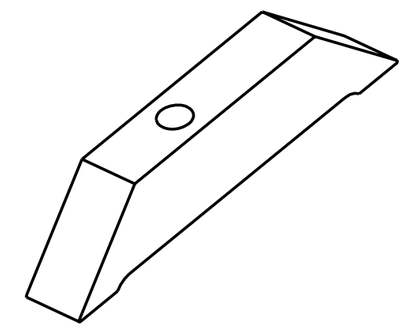

SCALE 1.5 : 1

NOTE:
1. ALL DIMENSIONS ARE IN MILLIMETERS, SURFACE FINISH IN MICRONS.
2. REMOVE ALL BURRS AND BREAK SHARP EDGES 0.3mm MAX.
3. UNLESS OTHERWISE SPECIFIED, SURFACE FINISH TO BE 6.3 MICRONS.

ITEM	DRAWING / PART NUMBER	NOMENCLATURE OR DESCRIPTION	MATERIAL / SPEC	QTY

PARTS LIST / BILL OF MATERIALS

UNLESS OTHERWISE SPECIFIED ALL DIMENSIONS ARE IN mm INCHES ARE FOR REFERENCE ONLY TOLERANCES

DECIMALS: X. ±.5 mm; .X ±.2 mm; .XX ±.08 mm — ANGULAR ±.3°

SURFACE FINISH IN MICRONS 3.2

REMOVE ALL BURRS AND BREAK SHARP EDGES .76 MAX. SURFACE TEXTURE IN ACCORDANCE WITH LATEST ASME B46.1-2002 DIMENSIONING AND TOLERANCING IN ACCORDANCE WITH LATEST ASME Y14.5M-1994

DRAWN BY: T. GRABINSKI	DATE 21-May-04	
XFD GROUP LEADER: P. DEN HARTOG	DATE	
DESIGNED BY: T. GRABINSKI	DATE 21-May-04	
RESPONSIBLE ENGINEER: E. TRAKHTENBERG	DATE	
CAM: M. WHITE	DATE	
LCLS MANAGER: S. V. MILTON	DATE	
RELEASE LEVEL: RELEASED	MODEL VER: 13	DRWG VER: 12

THIS DRAWING IS THE PROPERTY OF
ARGONNE NATIONAL LABORATORY
ADVANCED PHOTON SOURCE

LCLS LINAC COHERENT LIGHT SOURCE
UNDULATOR SYSTEM

UNDULATOR UNIT ASSEMBLY
MAGNET STRUCTURE
UPPER LEFT MAGNET STRUCTURE
MAGNET CLAMP

MODEL NAME:	ELECTRONIC FILE NAME:	MATERIAL DESCRIPTION:	SIZE:	ANL DRAWING NUMBER:	SLAC DRAWING NUMBER:	REV.
L143-110104	A3637300	5/16" AMPCO 8 ALUMINUM BRONZE PLATE	B	L143-110104	PF-381-000-31	00

SLAC SPIRES TITLE: LCLS UND MAG UP L MAG CLAMP — FSCM No OHRH5 — SCALE: 1.000 — DO NOT SCALE DRAWING — SHEET 1 OF 1