REVISIONS					
ZONE	REV	DESCRIPTION	BY	APPROVED	DATE
	01	REFER TO DCN NO. 050204-15	TLG	EMT	02/04/05
	02	REFER TO DCN NO. 050223-08	TLG	GSL	02/23/05
	03	REFER TO DCN NO. 050304-02	TLG		03/04/05
	04	REFER TO DCN NO. 050422-01	DC		04/22/05

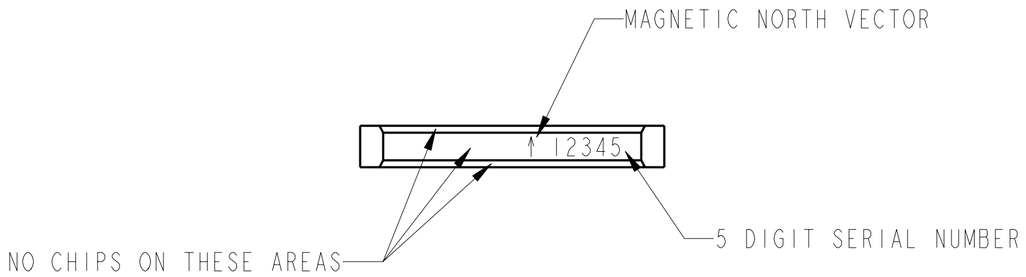

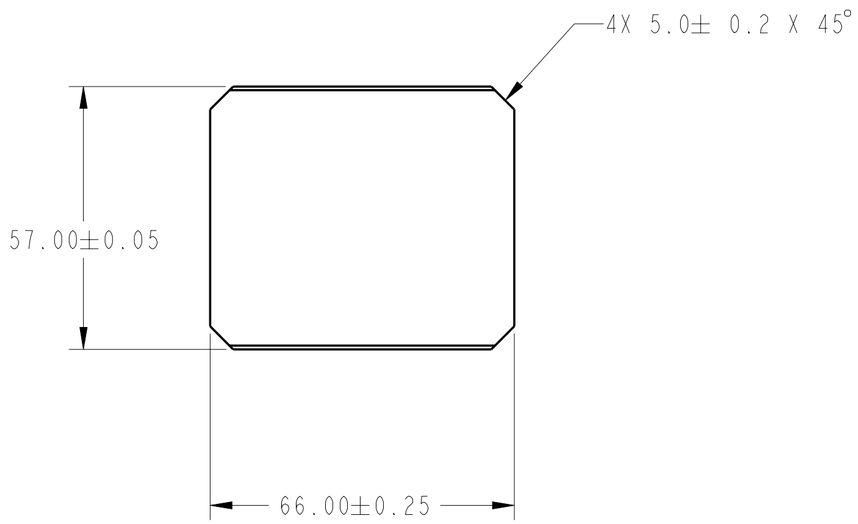

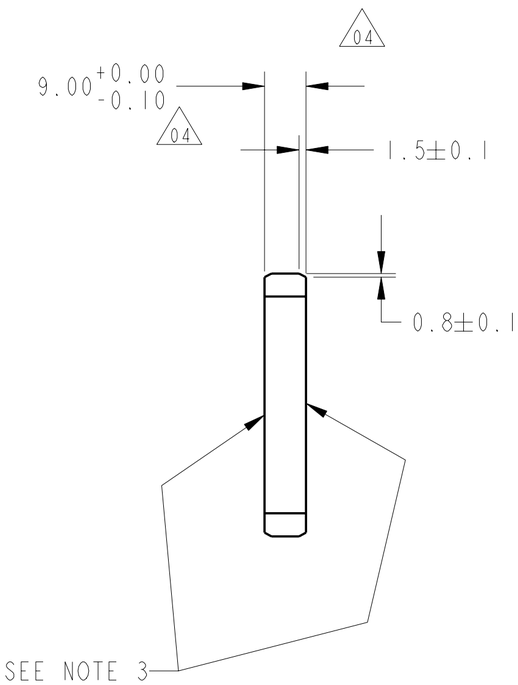

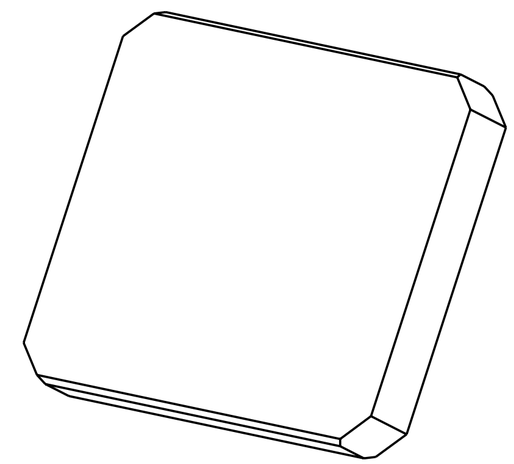

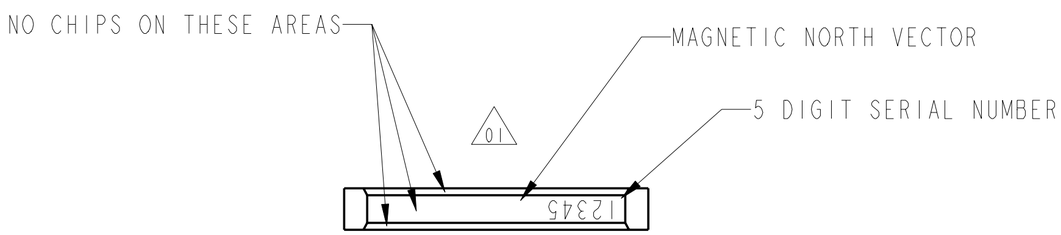

NOTE:

1. ALL DIMENSIONS ARE IN MILLIMETERS, SURFACE FINISH IN MICRONS. 03
2. MATERIAL AND MAGNET SPECIFICATION PER STATEMENT OF WORK DOC. NO. L143-00032.
3. AREA OF CHIPS NOT TO EXCEED 1% OF THE AREA OF THESE SURFACES.
4. BREAK ALL SHARP CORNERS 0.3mm MAX. 04
5. MAGNET MUST HAVE SURFACE TREATMENT FOR CORROSION PROTECTION. SURFACE TREATMENT SHALL BE NICKEL PLATING OR OTHER METALLIC PLATING, IF APPROVED. PLATING MUST BE 0.01 TO 0.05 mm THICK. 04
6. ALL DIMENSIONS APPLY AFTER PLATING.

ITEM	DRAWING / PART NUMBER	NOMENCLATURE OR DESCRIPTION	MATERIAL / SPEC	QTY

PARTS LIST / BILL OF MATERIALS

UNLESS OTHERWISE SPECIFIED ALL DIMENSIONS ARE IN mm INCHES ARE FOR REFERENCE ONLY TOLERANCES

DECIMALS: X. ±.5 mm, .X ±.2 mm, .XX ±.08 mm — ANGULAR ±.3°

SURFACE FINISH IN MICRONS 3.2

REMOVE ALL BURRS AND BREAK SHARP EDGES .76 MAX. SURFACE TEXTURE IN ACCORDANCE WITH LATEST ASME B46.1-2002 DIMENSIONING AND TOLERANCING IN ACCORDANCE WITH LATEST ASME Y14.5M-1994

DRAWN BY: T. GRABINSKI	DATE 21-May-04	
XFD GROUP LEADER: P. DEN HARTOG	DATE 29-Nov-04	
DESIGNED BY: T. GRABINSKI	DATE 21-May-04	
RESPONSIBLE ENGINEER: E. TRAKHTENBERG	DATE 29-Nov-04	
CAM: M. WHITE	DATE 29-Nov-04	
LCLS MANAGER: S. V. MILTON	DATE 29-Nov-04	
MODEL NAME: L143-110106	RELEASE LEVEL: PENDING	MODEL VER: 0 / DRWG VER: 0
ELECTRONIC FILE NAME: A3637504	MATERIAL DESCRIPTION: NdFeB TYPE MATERIAL (SEE NOTE 7)	
SLAC SPIRES TITLE: LCLS UND MAG UP L MAG MAG		

THIS DRAWING IS THE PROPERTY OF
ARGONNE NATIONAL LABORATORY
ADVANCED PHOTON SOURCE

LCLS — LINAC COHERENT LIGHT SOURCE UNDULATOR SYSTEM

02 UNDULATOR UNIT ASSEMBLY
MAGNET STRUCTURE
MAGNET

SIZE	ANL DRAWING NUMBER	SLAC DRAWING NUMBER	REV.
C	L143-110106	PF-381-000-33	04

FSCM No OHRH5 — SCALE: 1.000 — DO NOT SCALE DRAWING — SHEET 1 OF 1