REVISIONS					
ZONE	REV	DESCRIPTION	BY	APPROVED	DATE
	01	SEE DCN NO. 060514-02	DC		
	02	SEE DCN NO. 060607-07	DC		

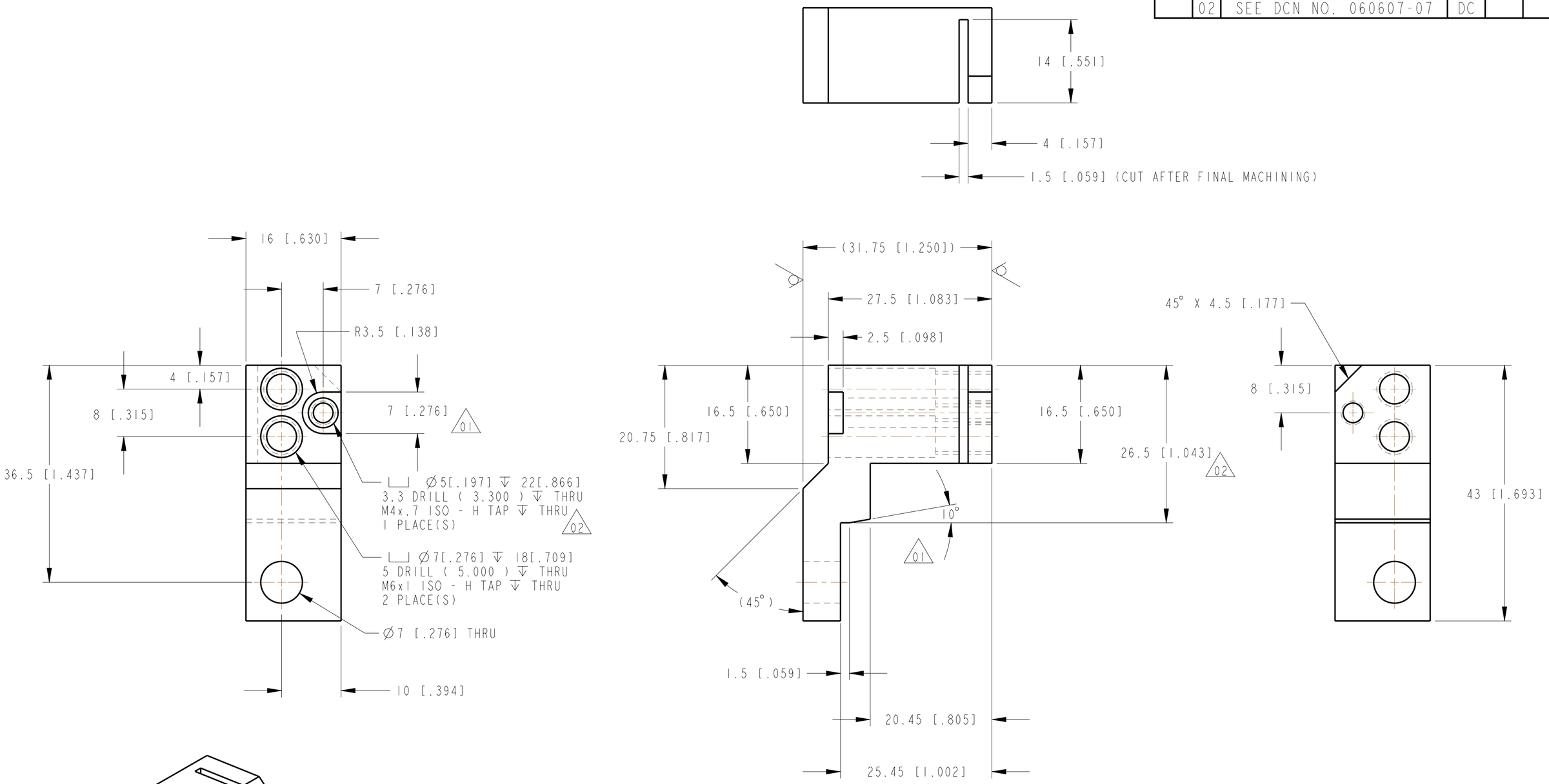

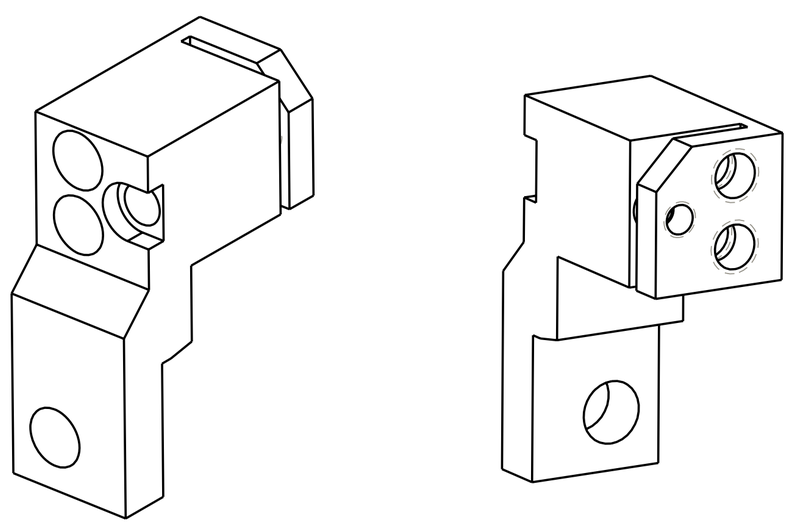

NOTE:

CLEAR ANODIZE.

ITEM	DRAWING / PART NUMBER	NOMENCLATURE OR DESCRIPTION	MATERIAL / SPEC	QTY

PARTS LIST / BILL OF MATERIALS

UNLESS OTHERWISE SPECIFIED ALL DIMENSIONS ARE IN mm INCHES ARE FOR REFERENCE ONLY
TOLERANCES
DECIMALS: X. ±.5 mm, .X ±.2 mm, .XX ±.08 mm — ANGULAR ±.3°
SURFACE FINISH IN MICRONS 3.2
REMOVE ALL BURRS AND BREAK SHARP EDGES .76 MAX.
SURFACE TEXTURE IN ACCORDANCE WITH LATEST ASME B46.1-2002
DIMENSIONING AND TOLERANCING IN ACCORDANCE WITH LATEST ASME Y14.5M-1994

DRAWN BY: D. CAPATINA	DATE 25-Mar-05	
XFD GROUP LEADER: P. DEN HARTOG	DATE	
DESIGNED BY: D. CAPATINA	DATE 25-Mar-05	
RESPONSIBLE ENGINEER: E. TRAKHTENBERG	DATE	
CAM: M. WHITE	DATE	
LCLS MANAGER: S. V. MILTON	DATE	
MODEL NAME: L143-110109	RELEASE LEVEL: PENDING	MODEL VER: 2 / DRWG VER: 2
ELECTRONIC FILE NAME: A3812902	MATERIAL DESCRIPTION: AL CAST TOOL & JIG PLATE-1.25" PLATE	
SLAC SPIRES TITLE: LCLS UND MAG BRACKET 1		

THIS DRAWING IS THE PROPERTY OF
ARGONNE NATIONAL LABORATORY
ADVANCED PHOTON SOURCE

LCLS LINAC COHERENT LIGHT SOURCE
UNDULATOR SYSTEM

UNDULATOR UNIT ASSEMBLY
BRACKET 1

SIZE:	ANL DRAWING NUMBER:	SLAC DRAWING NUMBER:	REV.
C	L143-110109	PF-381-001-27	02

FSCM No OHRH5 — SCALE: 2:1 — DO NOT SCALE DRAWING — SHEET 1 OF 1