REVISIONS					
ZONE	REV	DESCRIPTION	BY	APPROVED	DATE

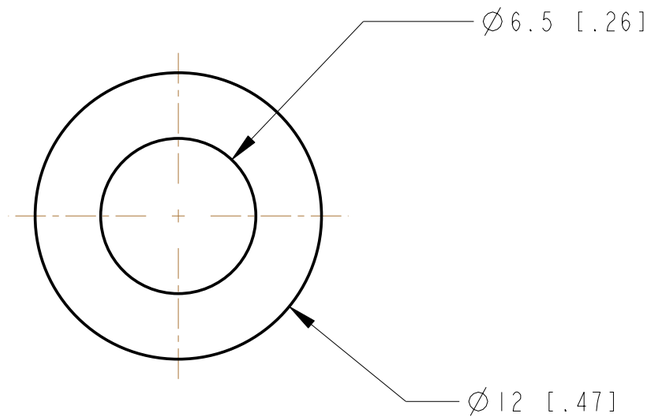

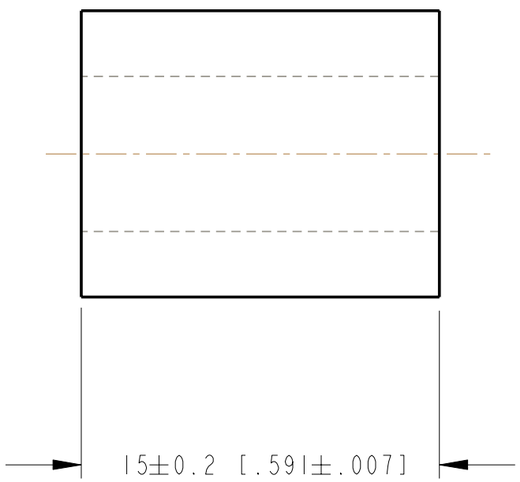

NOTE:

BLACK OXIDE.

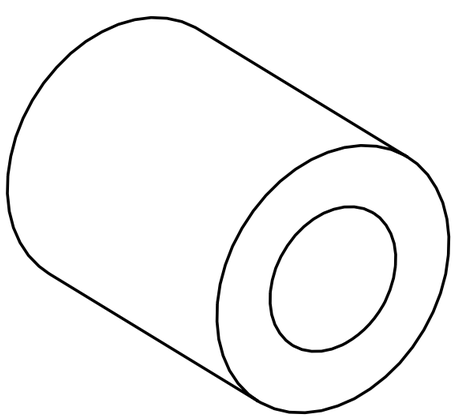

ITEM	DRAWING / PART NUMBER	NOMENCLATURE OR DESCRIPTION	MATERIAL / SPEC	QTY

PARTS LIST / BILL OF MATERIALS

UNLESS OTHERWISE SPECIFIED
ALL DIMENSIONS ARE IN mm
INCHES ARE FOR REFERENCE ONLY
TOLERANCES

DECIMALS: X. ±.5 mm; .X ±.2 mm; .XX ±.08 mm
ANGULAR: ±.3°

SURFACE FINISH IN MICRONS 3.2

REMOVE ALL BURRS AND BREAK SHARP EDGES .76 MAX.
SURFACE TEXTURE IN ACCORDANCE WITH LATEST ASME B46.1-2002
DIMENSIONING AND TOLERANCING IN ACCORDANCE WITH LATEST ASME Y14.5M-1994

DRAWN BY: D. CAPATINA	DATE 21-Mar-05	
XFD GROUP LEADER: P. DEN HARTOG	DATE	
DESIGNED BY: D. CAPATINA	DATE 21-Mar-05	
RESPONSIBLE ENGINEER: E. TRAKHTENBERG	DATE	
CAM: M. WHITE	DATE	
LCLS MANAGER: S. V. MILTON	DATE	
RELEASE LEVEL: RELEASED	MODEL VER: 2	DRWG VER: 1

THIS DRAWING IS THE PROPERTY OF
ARGONNE NATIONAL LABORATORY
ADVANCED PHOTON SOURCE

LINAC COHERENT LIGHT SOURCE
UNDULATOR SYSTEM

UNDULATOR UNIT ASSEMBLY
SPACER

MODEL NAME:	ELECTRONIC FILE NAME:	MATERIAL DESCRIPTION:	SIZE:	ANL DRAWING NUMBER:	SLAC DRAWING NUMBER:	REV.
L143-110119	A3813300	STEEL 1018	B	L143-110119	PF-381-000-99	00

SLAC SPIRES TITLE: LCLS UND MAG SPACER

FSCM No OHRH5 | SCALE: 4:1 | DO NOT SCALE DRAWING | SHEET 1 OF 1