REVISIONS					
ZONE	REV	DESCRIPTION	BY	APPROVED	DATE
	01	SEE DCN NO. 060320-07	DC		
	02	SEE DCN NO. 060517-10	DC		

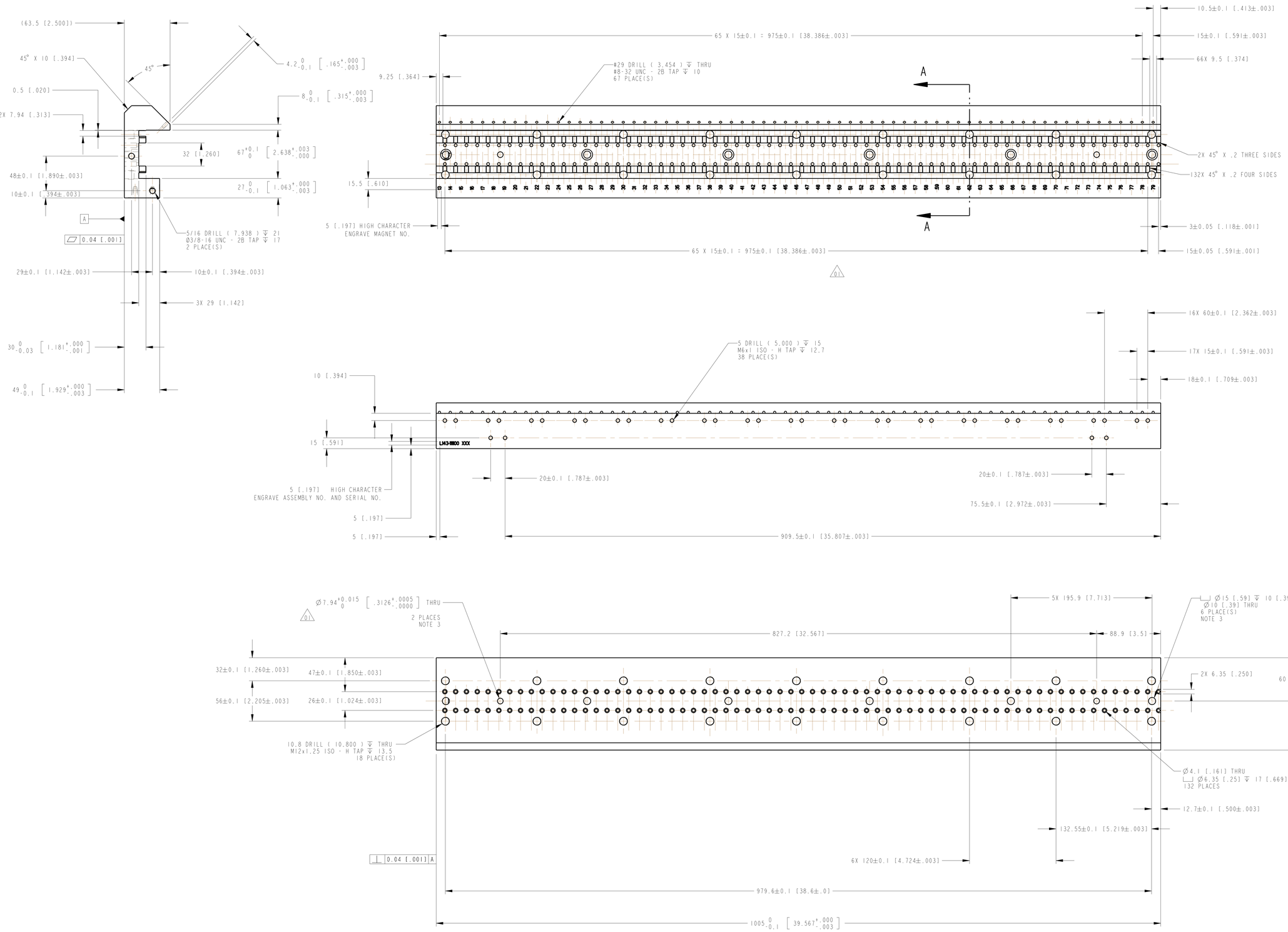

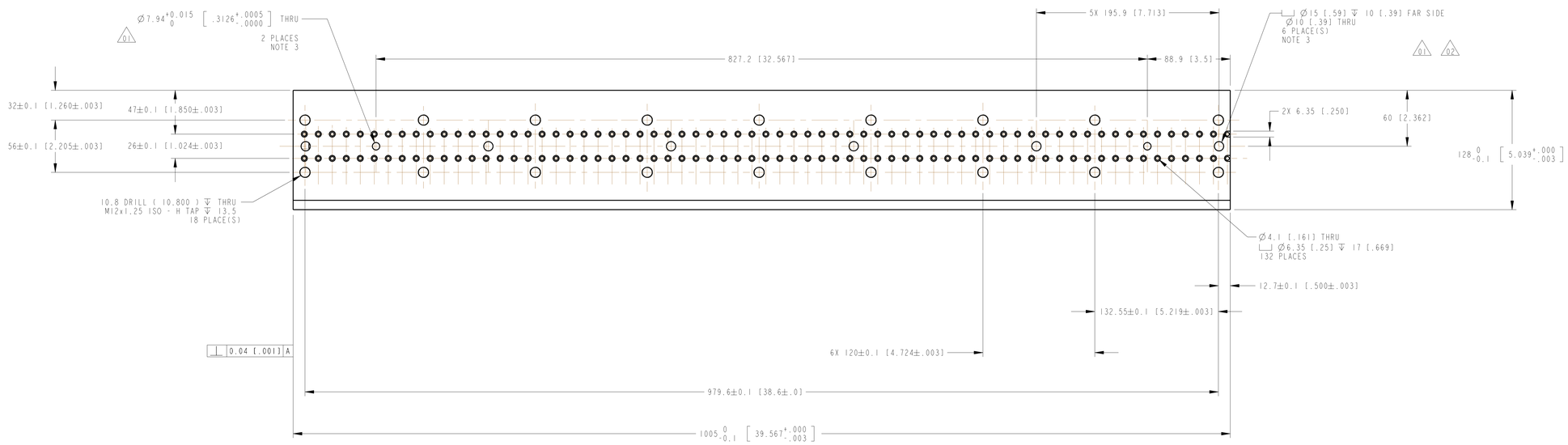

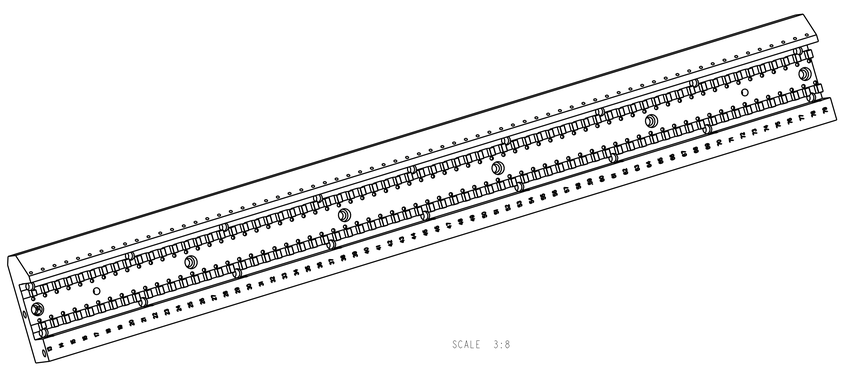

SCALE 3:8

NOTES:

1. CLEAR ANODIZE.
2. ONE THIRD OF THE PARTS SHOULD HAVE NUMBERS FROM 13 TO 79.
   ONE THIRD OF THE PARTS SHOULD HAVE NUMBERS FROM 80 TO 146.
   ONE THIRD OF THE PARTS SHOULD HAVE NUMBERS FROM 147 TO 213.
3. THESE HOLES ARE OPTIONAL.

ITEM	DRAWING / PART NUMBER	NOMENCLATURE OR DESCRIPTION	MATERIAL / SPEC	QTY

PARTS LIST / BILL OF MATERIALS

UNLESS OTHERWISE SPECIFIED: ALL DIMENSIONS ARE IN mm. INCHES ARE FOR REFERENCE ONLY. TOLERANCES: DECIMALS X ±0.5 mm, X.X ±0.2 mm, X.XX ±0.08 mm; ANGULAR ±.5°; SURFACE FINISH IN MICRONS 32

REMOVE ALL BURRS AND BREAK SHARP EDGES .76 MAX. SURFACE TEXTURE IN ACCORDANCE WITH LATEST ASME B46.1-2002. DIMENSIONING AND TOLERANCING IN ACCORDANCE WITH LATEST ASME Y14.5M-1994.

DRAWN BY: D. CAPATINA — DATE: 29-Oct-04
MFG GROUP LEADER: P. DEN HARTOG — DATE:
DESIGNED BY: D. CAPATINA — DATE: 29-Oct-04
RESPONSIBLE ENGINEER: E. TRAKHTENBERG — DATE:
CAM: M. WHITE — DATE:
ALS MANAGER: S. V. MILTON — DATE:

THIS DRAWING IS THE PROPERTY OF
ARGONNE NATIONAL LABORATORY
ADVANCED PHOTON SOURCE
LINAC COHERENT LIGHT SOURCE
UNDULATOR SYSTEM

UNDULATOR UNIT ASSEMBLY
MAGNET STRUCTURE
LOWER MIDDLE MAGNET STRUCTURE
BASE

MODEL NAME: L143-111101
RELEASE LEVEL: PENDING
MODEL VER.: 0
DRWG VER.: 0
ELECTRONIC FILE NAME: A3741202
MATERIAL DESCRIPTION: AL CAST TOOL & JIG PLATE-2.5"PLATE
SIZE: E
DWG NO. (ASSY): L143-111101
SHEET NO. (ASSY): PF-381-000-89
REV: 02
DWG NO. (PARTS): TCLS UND MAG LOW M MAG BASE
SCALE: 1:2
DO NOT SCALE DRAWING
SHEET 1 OF 1