REVISIONS					
ZONE	REV	DESCRIPTION	BY	APPROVED	DATE

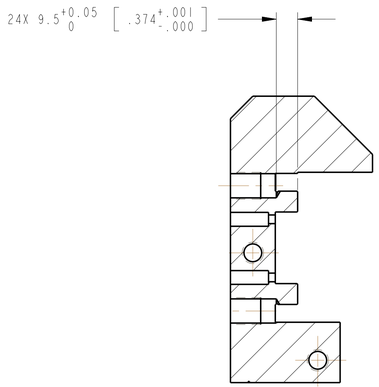

SECTION A - A

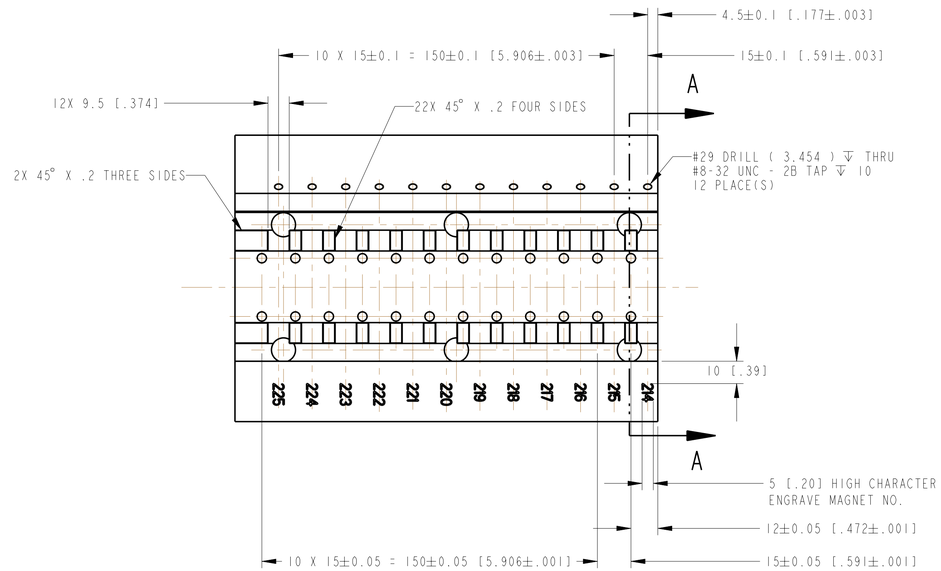

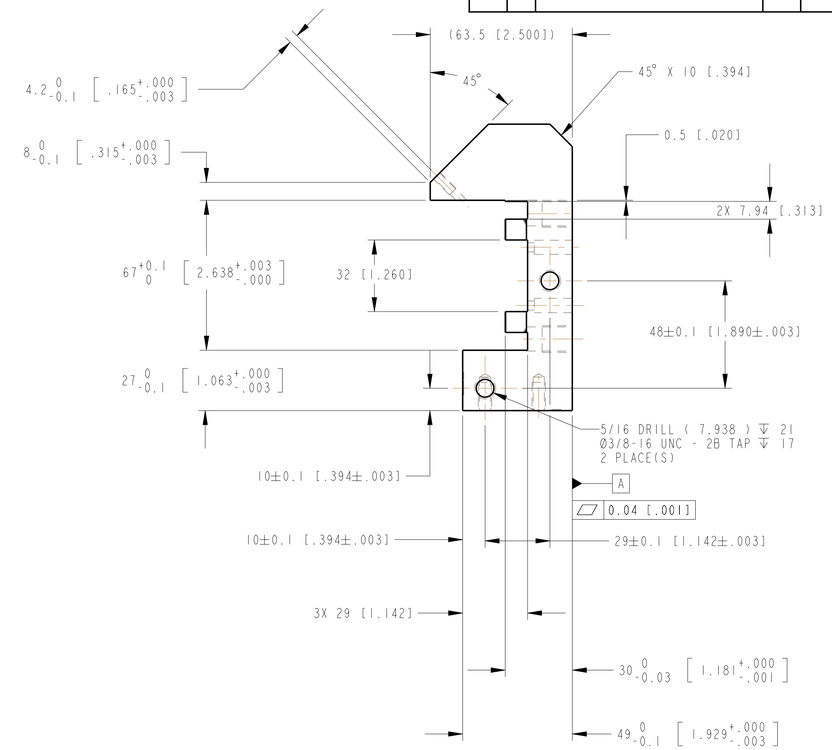

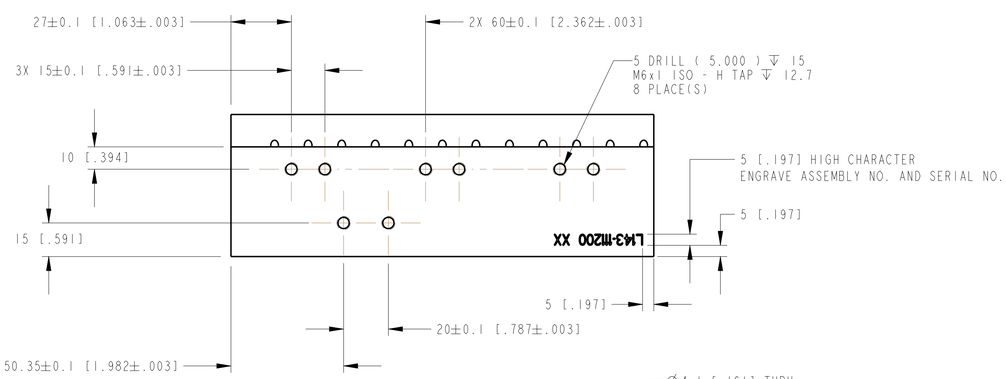

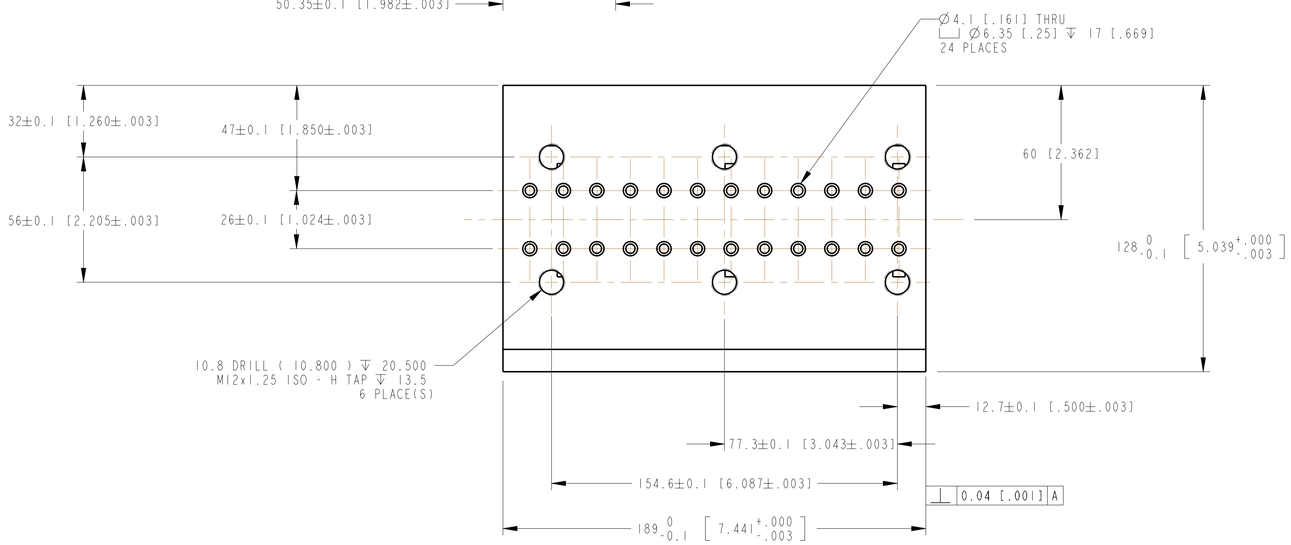

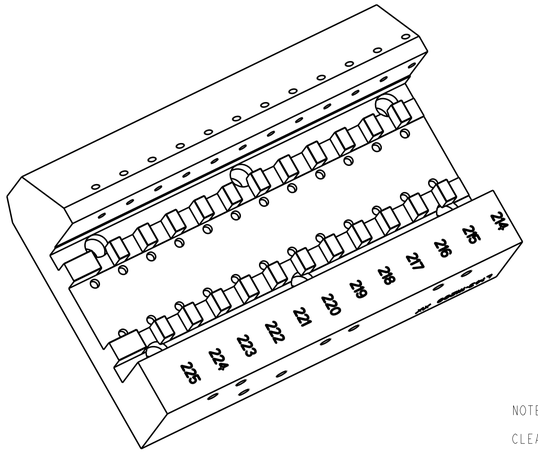

NOTE:

CLEAR ANODIZE.

ITEM	DRAWING / PART NUMBER	NOMENCLATURE OR DESCRIPTION	MATERIAL / SPEC	QTY
		PARTS LIST / BILL OF MATERIALS		

UNLESS OTHERWISE SPECIFIED ALL DIMENSIONS ARE IN mm INCHES ARE FOR REFERENCE ONLY TOLERANCES
DECIMALS X. ±.3 mm .X ±.2 mm .XX ±.08 mm ANGULAR ±.3°
SURFACE FINISH IN MICRONS
REMOVE ALL BURRS AND BREAK SHARP EDGES .76 MAX. SURFACE TEXTURE IN ACCORDANCE WITH LATEST ASME B46.1-2002 DIMENSIONING AND TOLERANCING IN ACCORDANCE WITH LATEST ASME Y14.5M-1994

DRAWN BY: D. CAPATINA	DATE 28-Aug-04	
MFD GROUP LEADER: P. DEN HARTOG	DATE	
DESIGNED BY: D. CAPATINA	DATE 28-Aug-04	
RESPONSIBLE ENGINEER: E. TRAKHTENBERG	DATE	
CAM: M. WHITE	DATE	
LCLS MANAGER: S. V. MILTON	DATE	
MODEL NAME: L143-111201	RELEASE LEVEL: RELEASED	MODEL VER.: 8 / DRWG VER.: 4
ELECTRONIC FILE NAME: A3741400	MATERIAL DESCRIPTION: AL CAST TOOL & JIG PLATE-2.5"PLATE	
SLAC SPIRES TITLE: LCLS UND MAG UP R MAG BASE		

THIS DRAWING IS THE PROPERTY OF
ARGONNE NATIONAL LABORATORY
ADVANCED PHOTON SOURCE

LCLS LINAC COHERENT LIGHT SOURCE
UNDULATOR SYSTEM

UNDULATOR UNIT ASSEMBLY
MAGNET STRUCTURE
UPPER RIGHT MAGNET STRUCTURE
BASE

SIZE	ANL DRAWING NUMBER	SLAC DRAWING NUMBER	REV
D	L143-111201	PF-381-000-91	00

ITEM № OHRHS | SCALE: 3:4 | DO NOT SCALE DRAWING | SHEET 1 OF 1