REVISIONS					
ZONE	REV	DESCRIPTION	BY	APPROVED	DATE
	01	SEE DCN NO. 060228-06	DC		
	02	SEE DCN NO. 060517-08	DC		

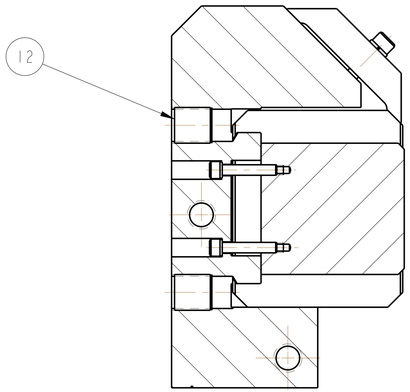

SECTION A-A

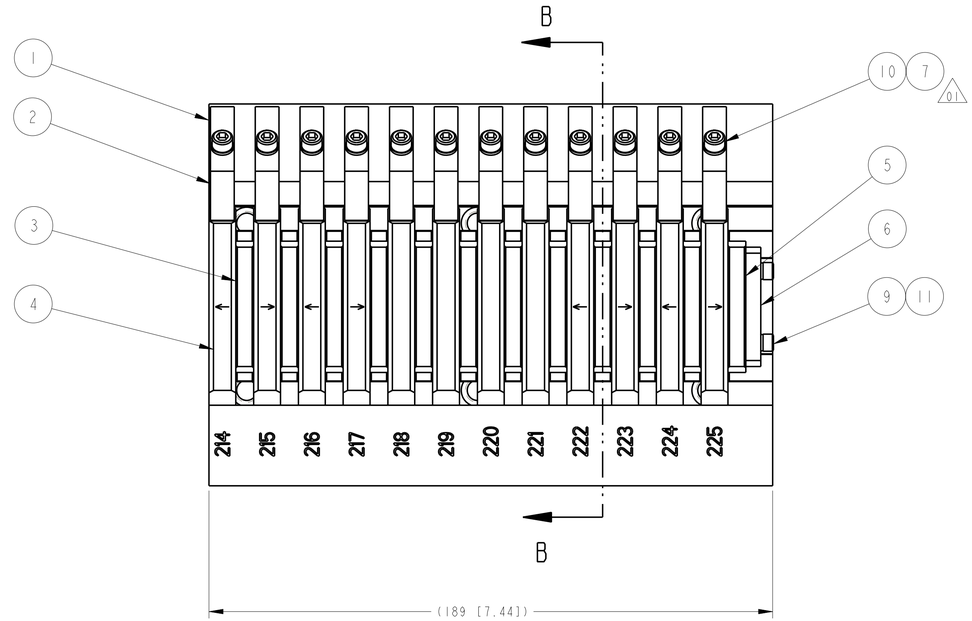

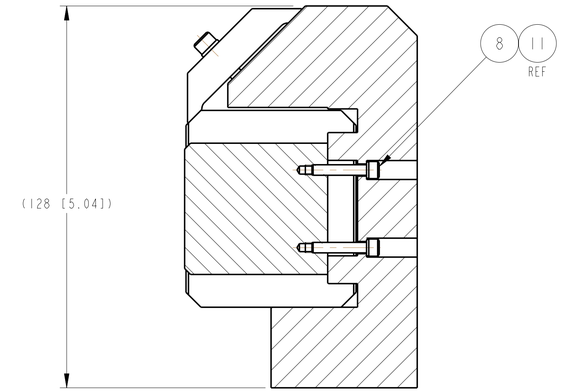

SECTION B-B

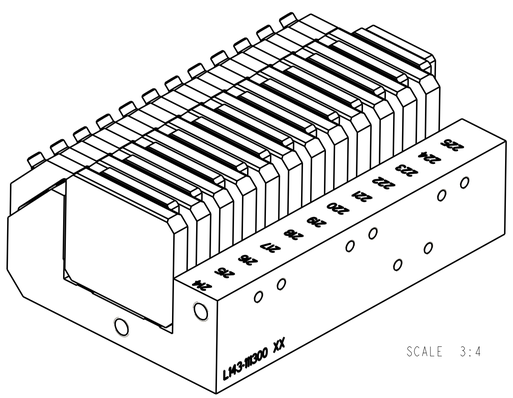

SCALE 3:4

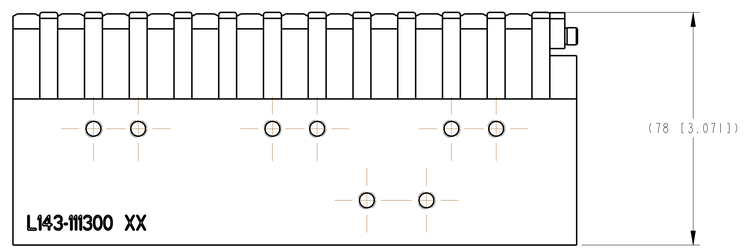

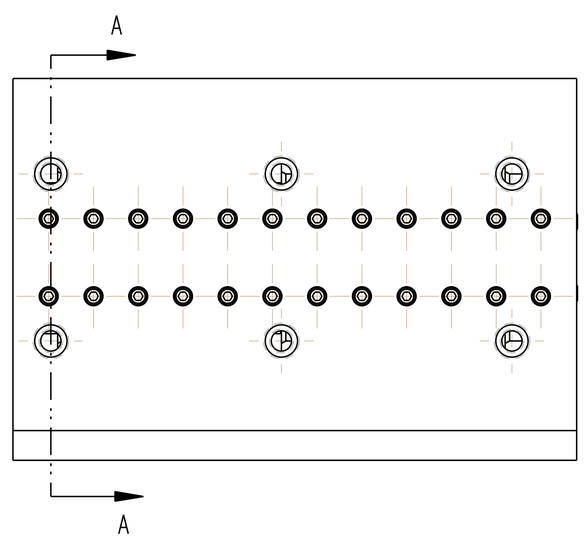

1 SOURCE OR EQUIVALENT
McMASTER-CARR
P.O. BOX 4355
CHICAGO, IL 60680-4355
630-883-0300

2 SOURCE OR EQUIVALENT
REID TOOL SUPPLY
2265 BLACK CREEK ROAD
MUSKEGON, MI 49444
800-253-0421

	ITEM	DRAWING / PART NUMBER	NOMENCLATURE OR DESCRIPTION	MATERIAL / SPEC	QTY
2	12	KL1-66353	INSERT M8 X 1.25 X M12 X 1.25	303 SST	6
1	11	98437A104	WASH LOCK NO. 6(.138) NOM X .216 OD X .03 THK	18-8 SST	26
NOTE 3 1	10	92196A197	SHCS NO. 8(.164)-32 UNC-2A X .75 LG	STN. STL.	12
1	9	92196A146	SHCS NO. 6(.138)-32 UNC-2A X .38 LG	18-8 SST	2
NOTE 2 1	8	92185A151	SHCS NO. 6(.138)-32 UNC-3A X.75 LG	316 SST	24
1	7	92146A545	WASHER LOCK .293 OD X .174 ID X .040 THK	18-8 SST	12
01	6	L143-110108	DIVING BOARD	1018 STEEL	1
	5	L143-110107	LAST POLE	VACOFLUX 50	1
	4	L143-110106	MAGNET	NdFeB TYPE MATERIAL (SEE NOTE 7)	12
	3	L143-110105	POLE	VACOFLUX 50	11
	2	L143-110104	MAGNET CLAMP	5/16" AMPCO 8 ALUMINUM BRONZE PLATE	12
	1	L143-111301	BASE	AL CAST TOOL & JIG PLATE-2.5"PLATE	1

PARTS LIST / BILL OF MATERIALS

UNLESS OTHERWISE SPECIFIED ALL DIMENSIONS ARE IN mm INCHES ARE FOR REFERENCE ONLY
TOLERANCES
DECIMALS: X ± .5 mm; .X ± .2 mm; .XX ± .08 mm; ANGULAR ± .5°
SURFACE FINISH IN MICRONS
REMOVE ALL BURRS AND BREAK SHARP EDGES .76 MAX.
SURFACE TEXTURE IN ACCORDANCE WITH LATEST ASME B46.1-2002
DIMENSIONING AND TOLERANCING IN ACCORDANCE WITH LATEST ASME Y14.5M-1994

DRAWN BY: D. CAPATINA — DATE: 03-Nov-04
KFD GROUP LEADER: P. DEN HARTOG — DATE:
DESIGNED BY: D. CAPATINA — DATE: 03-Nov-04
RESPONSIBLE ENGINEER: E. TRAKHTENBERG — DATE:
CAM: M. WHITE — DATE:
LCLS MANAGER: S. V. MILTON — DATE:
MODEL NAME: L143-111300
RELEASE LEVEL: PENDING — MODEL VER: 0 — DRWG VER: 0
ELECTRONIC FILE NAME: A3741502
MATERIAL DESCRIPTION: SEE PARTS LIST
SLAC SPIRES TITLE: LCLS UND MAG LOW R MAG ASSY

THIS DRAWING IS THE PROPERTY OF
ARGONNE NATIONAL LABORATORY
ADVANCED PHOTON SOURCE

LCLS LINAC COHERENT LIGHT SOURCE
UNDULATOR SYSTEM

UNDULATOR UNIT ASSEMBLY
MAGNET STRUCTURE
LOWER RIGHT MAGNET STRUCTURE
LOWER RIGHT MAG. STRUCTURE ASSEMBLY

SIZE: D — ANL DRAWING NUMBER: L143-111300 — SLAC DRAWING NUMBER: SA-381-000-92 — REV. 02
FROM IN OHRNS — SCALE: 1:1 — DO NOT SCALE DRAWING — SHEET 1 OF 1

NOTES:

1. FOR ASSEMBLY PROCEDURE AND MAGNET INSTALLATION SEE DOCUMENT L143-00076.
2. POSITION 8 SCREWS SHOULD BE TIGHTENED TO 20 INCH LBS. EACH SCREW SHOULD BE TIGHTENED TO 1/2 TORQUE AND THEN TO FULL TORQUE.
3. POSITION 10 SCREWS SHOULD BE TIGHTENED TO 25 INCH LBS.